CONQUIP INDUSTRIAL
0845 201 5030

CS-206

Geared Coneflow Concrete Skip

CANTI DECK
CRANE LOADING PLATFORMS
0845 201 5035

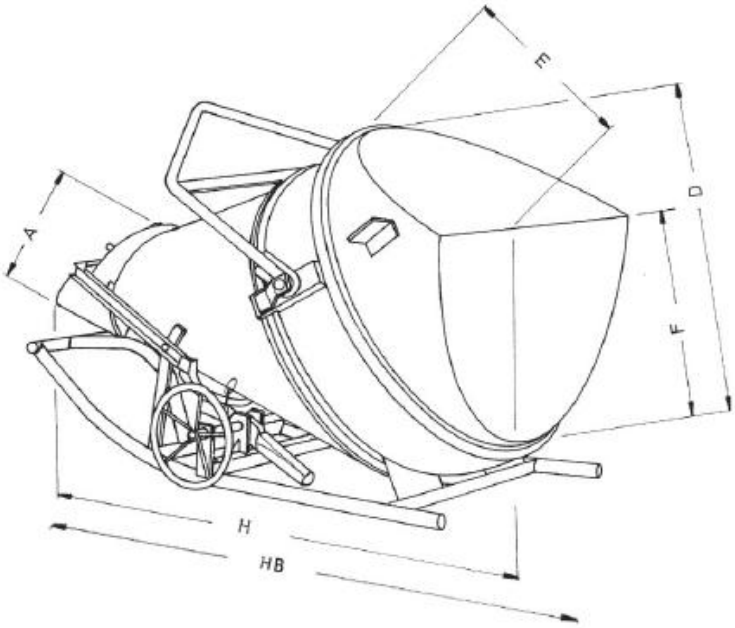

A general purpose skip which is fast and accurate in placing concrete. Easy concrete flow with good control due to the cone shape design, with laydown facility to assist filling. When lifted the skip returns to it's vertical position ready for pouring concrete.

Cap.	D	A	E	F	H	HB	Wt
500	1150	420	650	850	1900	2480	260
750	1150	420	700	900	1960	2540	360
1000	1150	420	700	980	2200	2780	460
1250	1400	500	850	1150	2400	3100	585
1500	1400	500	850	1200	2500	3200	630
2000	1400	500	850	1300	2700	3400	870

Lifting & Handling Solutions for the Construction Industry
Designed & Manufactured in the UK

Conquip Industrial, Waterbrook Estate, Waterbrook Road, Alton, Hampshire, GU34 2UD. United Kingdom
Telephone; +44 (0) 845 201 5030 Fax: +44 (0) 845 201 5031 **E-Mail:** sales@conquipindustrial.co.uk